KR 180 R2100 nano F exclusive

Technical data

Maximum reach	2100 mm
Rated payload	180 kg
Rated supplementary load, rotating column / link arm / arm	0 kg / 0 kg / 30 kg
Rated total load	210 kg
Pose repeatability (ISO 9283)	± 0.05 mm
Number of axes	6
Mounting position	Floor
Footprint	850 mm x 615 mm
Weight	approx. 998 kg

Axis data

Motion range	
A1	±165 °
A2	-135 ° / 45 °
A3	-65 ° / 155 °
A4	±350 °
A5	±125 °
A6	±350 °
Speed with rated payload	
A1	136 °/s
A2	95 °/s
A3	120 °/s
A4	179 °/s
A5	172 °/s
A6	219 °/s

Operating conditions

Ambient temperature during operation	10 °C to 55 °C (283 K to 328 K)

Protection rating

Protection rating (IEC 60529)	IP65 / IP67 / IP69
Protection rating, robot wrist (IEC 60529)	IP65 / IP67 / IP69

Controller

Controller	KR C5; KR C4

Workspace graphic

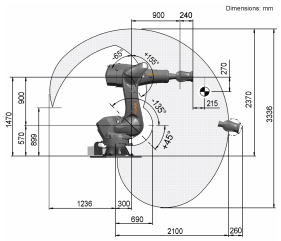

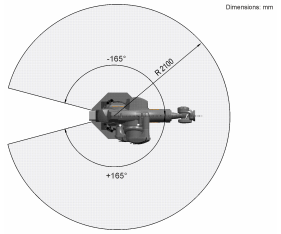

Mounting flange

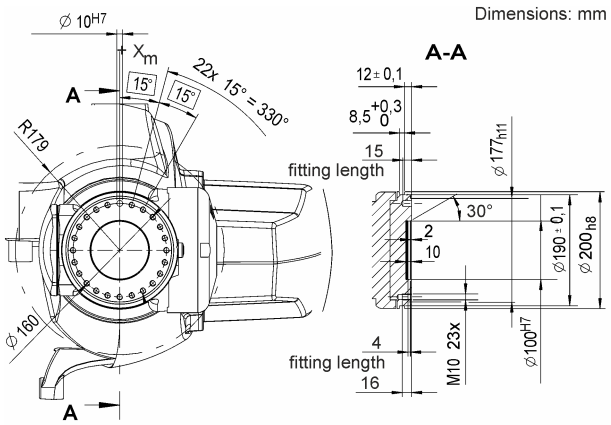

Details provided about the properties and usability of the products are purely for information purposes and do not constitute a guarantee of these characteristics. The extent of goods delivered and services performed is determined by the subject matter of the specific contract. No liability accepted for errors or omissions.
0000-294-633 / V15.1 / 26.05.2022 / en
KUKA Deutschland GmbH Zugspitzstrasse 140, 86165 Augsburg, Germany. Tel.: +49 821 797-4000, www.kuka.com